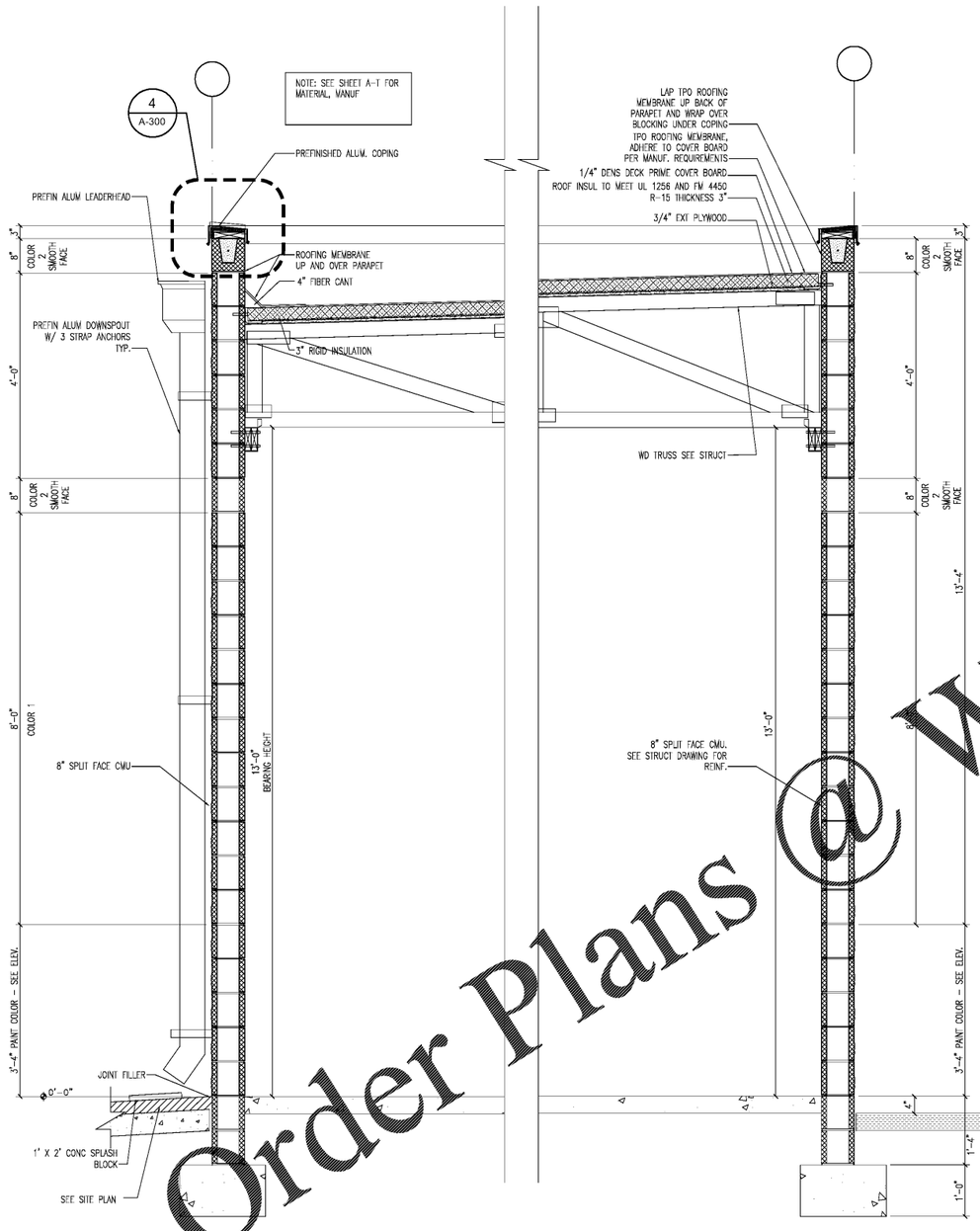

1 A-300 WALL SECTION 3/4"=1'-0"

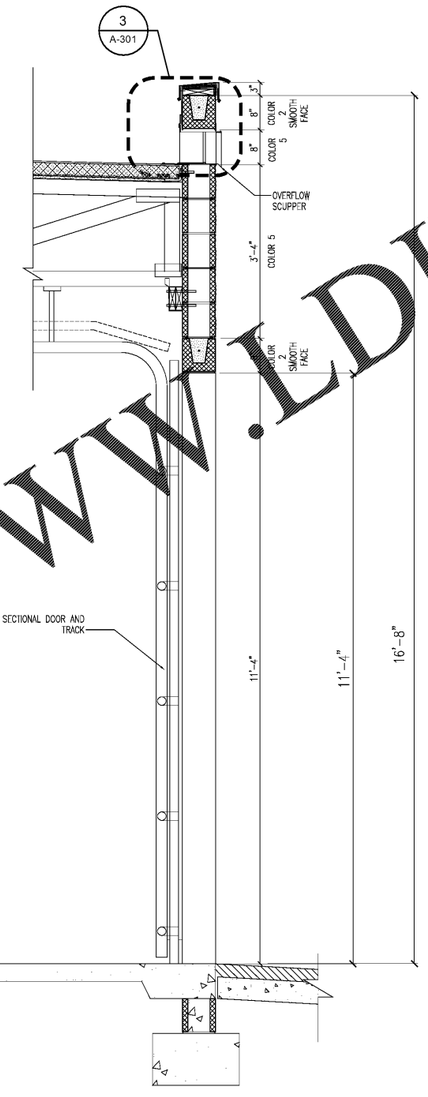

2 A-300 WALL SECTION 3/4"=1'-0"

3 A-300 WALL SECTION 3/4"=1'-0"

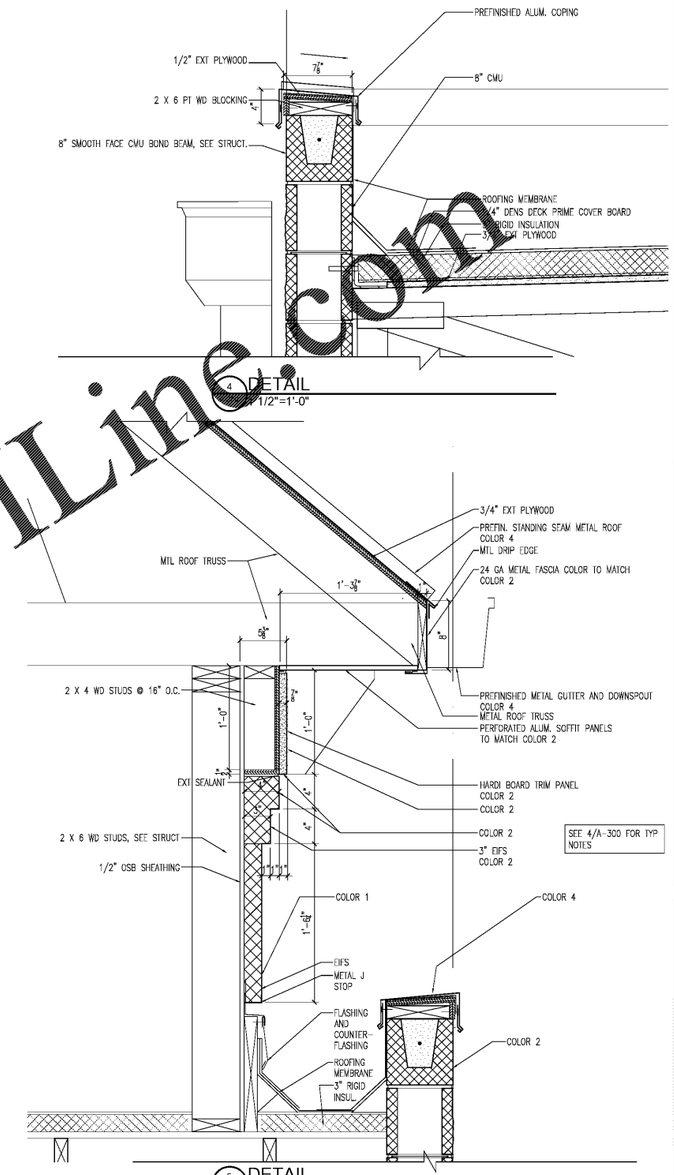

4 DETAIL 1 1/2"=1'-0"

5 A-300 DETAIL 1 1/2"=1'-0"

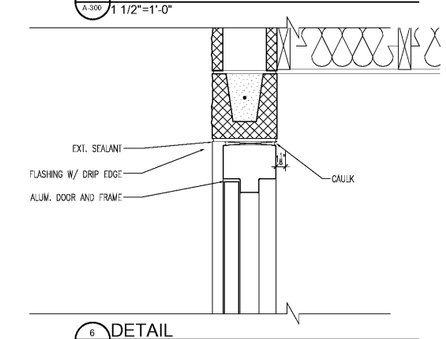

6 A-300 DETAIL 1 1/2"=1'-0"

Order Plans @ WWW.LDILine.com

TAKE 5 OIL CHANGE
11909 E. MLK JR BLVD
SEFFNER, FL 33584

FOR: TAKE 5 OIL CHANGE / DRIVEN BRANDS
CHARLOTTE NC

CHILDREY ROBINSON ASSOCIATES
1212 KENILWORTH AVENUE
CHARLOTTE, NORTH CAROLINA 28204
PHONE: 704.370.6000 FAX: 704.370.6006
www.childreyrobinson.com

This Drawing is the property of Childrey Robinson Associates. This Drawing is not to be copied in whole or in part. This Drawing or the information hereon shall not be used on any other project and must be returned to Childrey Robinson Associates upon request.
Copyright 2006, Childrey Robinson Associates.
Written dimensions take precedence over scaled dimensions.

STATE OF FLORIDA
LAYCAFFE BLAIR CHILDREY
AR0016286
REGISTERED ARCHITECT
6-24-19

REVISIONS

REV.	DESCRIPTION

DATE
06-24-2019

SHEET NAME
SECTIONS

SHEET NUMBER
A-300

Z:\0000 PROJECT DRAWING FILES\T - V PROJECTS\TAKE 5 SEFFNER FL\BASE 052919.DWG