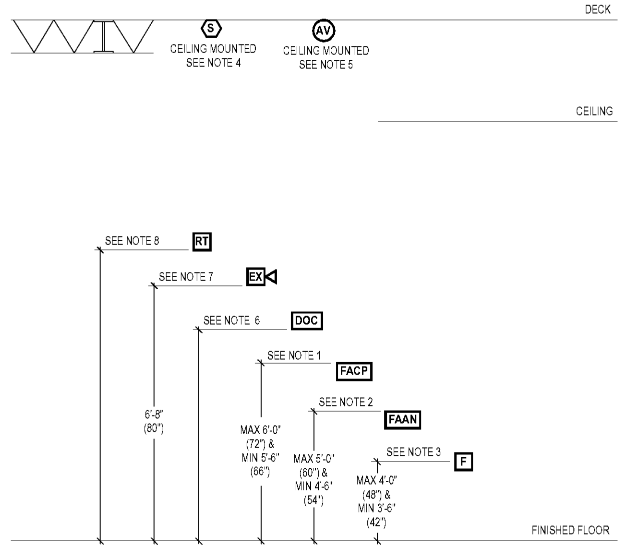

NOTES:

1. COORDINATE EXACT MOUNTING HEIGHT OF CONTROL PANELS WITH THE OWNER'S REPRESENTATIVE, ELECTRICAL CONTRACTOR, AND AHJ PRIOR TO INSTALLATION.
2. COORDINATE EXACT MOUNTING HEIGHT OF ANNUNCIATOR AT THE FRONT ENTRANCE WITH THE OWNER'S REPRESENTATIVE, ELECTRICAL CONTRACTOR, AND AHJ PRIOR TO INSTALLATION.
3. COORDINATE EXACT MOUNTING HEIGHT OF MANUAL PULL STATION WITH THE OWNER'S REPRESENTATIVE, ELECTRICAL CONTRACTOR, AND AHJ PRIOR TO INSTALLATION. MEASURED TO THE OPERABLE PART OF THE PULL STATION.
4. WHERE REQUIRED - LOCATE CEILING MOUNTED SMOKE DETECTORS ON THE BOTTOM OF DECK (NOT ON BOTTOM OF STRUCTURAL MEMBERS), AND AS INDICATED IN NFPA 72. THE SMOKE AND/OR HEAT DETECTORS AND FIRE ALARM CABLING SHALL BE INSTALLED AND SUPPORTED A MINIMUM 1-1/2 INCHES FROM THE LOWEST SURFACE OF THE ROOF DECKING IN ACCORDANCE WITH NATIONAL ELECTRICAL CODE.
5. WHERE REQUIRED -THE CEILING MOUNTED NOTIFICATION APPLIANCES SHALL BE INSTALLED ON THE BOTTOM OF JOIST / DECK IN ACCORDANCE WITH NFPA 72. THE CEILING MOUNTED NOTIFICATION APPLIANCES AND FIRE ALARM CABLING SHALL BE INSTALLED AND SUPPORTED A MINIMUM 1-1/2 INCHES FROM THE LOWEST SURFACE OF THE ROOF DECKING IN ACCORDANCE WITH NATIONAL ELECTRICAL CODE.
6. COORDINATE EXACT MOUNTING LOCATION AND HEIGHT OF THE DOCUMENTATION CABINET WITH THE OWNER'S REPRESENTATIVE AND LOCAL AHJ PRIOR TO INSTALLATION.
7. COORDINATE EXACT MOUNTING LOCATION AND HEIGHT OF THE EXTERIOR NOTIFICATION APPLIANCE WITH THE OWNER'S REPRESENTATIVE, ELECTRICAL CONTRACTOR, AND AHJ PRIOR TO INSTALLATION.
8. MOUNT THE REMOTE TEST STATION / ANNUNCIATORS ON AN ADJACENT COLUMN OR WALL AND AT AN ACCESSIBLE LOCATION THAT DOES NOT CONFLICT WITH STORE FIXTURES. COORDINATE EXACT MOUNTING LOCATION AND HEIGHT OF THE REMOTE TEST STATIONS / ANNUNCIATOR WITH THE OWNER'S REPRESENTATIVE, ELECTRICAL CONTRACTOR, AND AHJ PRIOR TO INSTALLATION.

1/FA3 TYPICAL FIRE ALARM MOUNTING HEIGHT DETAIL

NOT TO SCALE

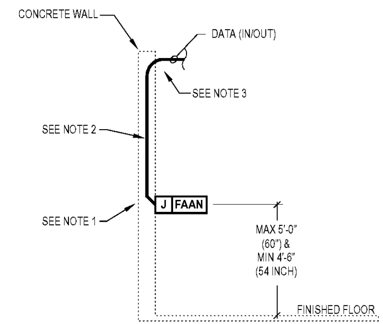

NOTES:

1. PROVIDE AN APPROVED BACKBOX PER THE MANUFACTURER SPECIFICATIONS BETWEEN 54 INCHES AND 60 INCHES ABOVE FINISHED FLOOR.
2. PROVIDE FIRE ALARM CABLING WITHIN 1/2 INCH CONDUIT INSIDE WALL (EXPOSED CONDUIT NOT ACCEPTABLE).
3. PROVIDE FIRE ALARM CABLING STUB-UP INTO CEILING JOIST AREA 6 INCHES ABOVE CEILING OR BOTTOM OF JOISTS AND TURN OUT WITH INSULATED BUSHING.

2/FA3 FIRE ALARM ANNUNCIATOR DETAIL

NOT TO SCALE

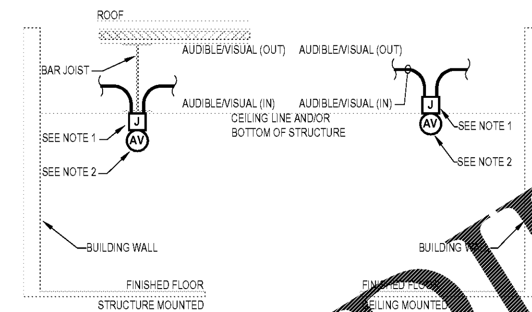

NOTES:

1. PROVIDE AN APPROVED BACK BOX PER THE MANUFACTURER SPECIFICATIONS ON BOTTOM OF STRUCTURE, AWAY FROM OBSTRUCTIONS, AND AS INDICATED ON FLOOR PLANS.
2. THE CEILING MOUNTED NOTIFICATION APPLIANCES SHALL BE INSTALLED ALIGNED AESTHETICALLY WITH THE CEILING LIGHTING, SPRINKLERS, AND OTHER FIXTURES. COORDINATE INSTALLATION OF ALL CEILING MOUNTED FIRE ALARM NOTIFICATION APPLIANCES WITH THE ARCHITECTURAL DRAWINGS AND ALL OTHER TRADES PRIOR TO INSTALLATION.

3/FA3 CEILING MOUNTED NOTIFICATION APPLIANCE DETAIL

NOT TO SCALE

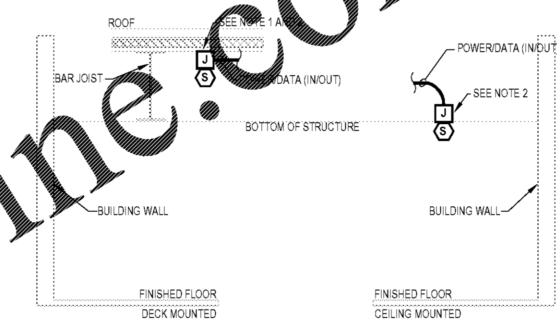

NOTES:

1. PROVIDE AN APPROVED BACKBOX PER THE MANUFACTURER SPECIFICATIONS ON BOTTOM OF DECK, AWAY FROM OBSTRUCTIONS, AND AS INDICATED ON FLOOR PLANS.
2. THE SMOKE DETECTOR AND FIRE ALARM CABLING INSTALLED AND SUPPORTED A MINIMUM 1-1/2 INCHES FORM THE LOWEST SURFACE OF THE ROOF DECKING IN ACCORDANCE WITH NATIONAL ELECTRICAL CODE.

4/FA3 SMOKE DETECTOR DETAIL

NOT TO SCALE

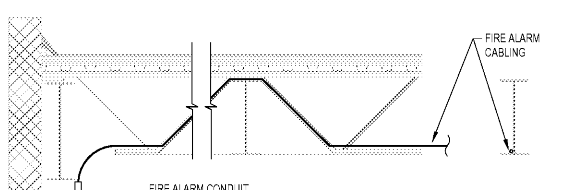

NOTES:

1. ALL OPEN FIRE ALARM CABLING SHALL BE CONCEALED FROM PUBLIC VIEW.

5/FA3 OPEN FIRE ALARM CABLING DETAIL

NOT TO SCALE

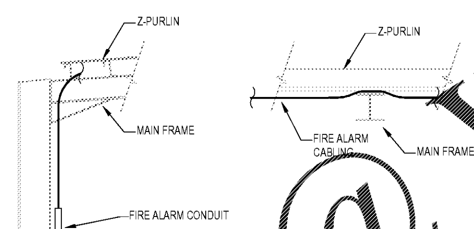

NOTES:

1. ALL OPEN FIRE ALARM CABLING SHALL BE CONCEALED FROM PUBLIC VIEW.
2. ROUTE ALL OPEN CABLE OVER SOLID MAIN FRAME STRUCTURE.

6/FA3 OPEN FIRE ALARM CABLING DETAIL

NOT TO SCALE

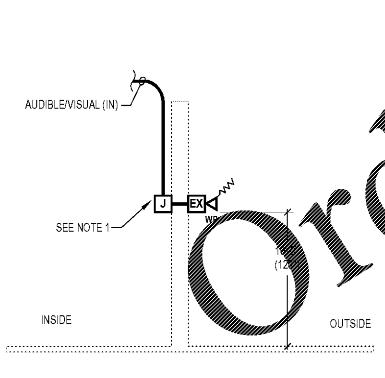

NOTES:

1. PROVIDE A BACK BOX PER THE MANUFACTURER SPECIFICATIONS ON THE INSIDE WALL AT 10 FEET ABOVE FINISHED FLOOR. STUB A CONDUIT THROUGH EXTERIOR WALL TO NOTIFICATION APPLIANCE SURFACE MOUNTED BACKBOX.

7/FA3 WEATHERPROOF EXTERIOR NOTIFICATION DETAIL

NOT TO SCALE

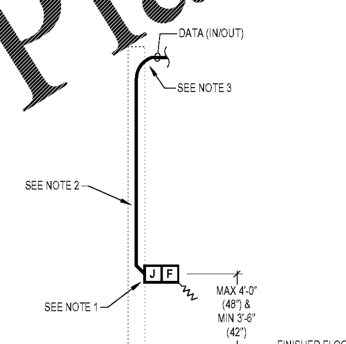

NOTES:

1. PROVIDE AN APPROVED BACKBOX PER THE MANUFACTURER SPECIFICATIONS BETWEEN 42 INCHES AND 48 INCHES ABOVE FINISHED FLOOR.
2. PROVIDE FIRE ALARM CABLING WITHIN 1/2 INCH CONDUIT INSIDE WALL (EXPOSED CONDUIT NOT ACCEPTABLE).
3. PROVIDE FIRE ALARM CONDUIT STUB-UP INTO CEILING JOIST AREA 6 INCHES ABOVE CEILING OR BOTTOM OD JOISTS AND TURN OUT WITH INSULATED BUSHING.

8/FA3 MANUAL PULL STATION DETAIL

NOT TO SCALE

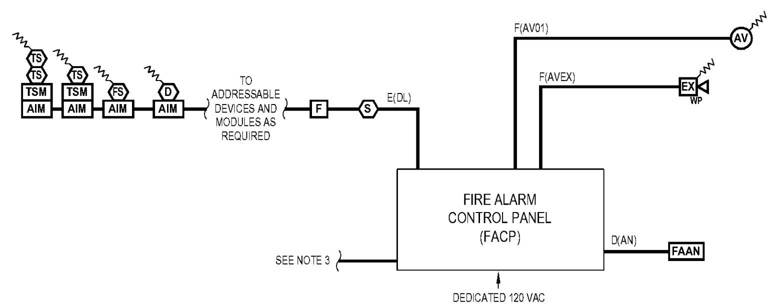

NOTES:

1. PROVIDE DEDICATED 120 VAC CIRCUITS, AND BATTERY BACKUP IN THE FACP.
2. PROVIDE SYNCHRONIZATION OF ALL REQUIRED VISUAL NOTIFICATION APPLIANCES AND CIRCUITS THROUGHOUT THE STORE.
3. PROVIDE TWO (2) MEANS OF SIGNAL TRANSMISSION TO THE OFF-SITE MONITORING FACILITY. PROVIDE A DEDICATED PHONE LINE FOR THE PRIMARY MEANS OF TRANSMISSION. THE SECONDARY MEANS SHALL UTILIZE A VoIP/ SIP CONNECTION TO OWNER'S NETWORK.
4. PROVIDE ALL REQUIRED CIRCUITS, MODULES, AND CONNECTIONS TO CONTROL AUDIBLE AND VISUAL NOTIFICATION APPLIANCES.
5. PROVIDE SUPERVISION OF ALL 120 VAC POWER AND ALL NOTIFICATION APPLIANCE CIRCUITS.

9/FA3 TYPICAL FIRE ALARM SYSTEM RISER DIAGRAM

NOT TO SCALE

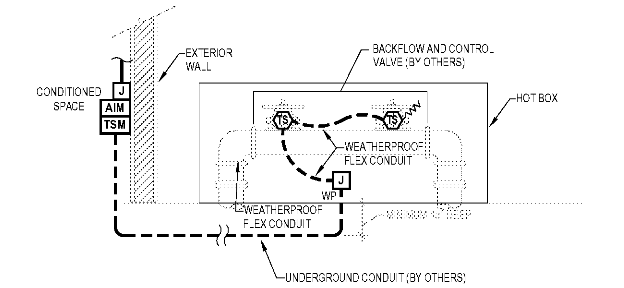

NOTES:

1. COORDINATE INSTALLATION OF A MINIMUM ONE (1) INCH UNDERGROUND CONDUIT, WITH PULL STRING, FOR FIRE ALARM CABLING CONNECTIONS TO THE EXTERIOR BACKFLOW PREVENTER INDICATING VALVE. SEE ELECTRICAL DRAWINGS FOR DETAILS ON UNDERGROUND CONDUIT.
2. PROVIDE MONITORING OF ALL TAMPER SWITCHES (BY OTHERS) ON THE EXTERIOR BACKFLOW PREVENTER. COORDINATE WIRING CONNECTIONS WITH THE GENERAL CONTRACTOR AND SITE CIVIL CONTRACTOR.
3. PROVIDE TRANSIENT SUPPRESSION ON ALL FIRE ALARM CIRCUITS LOCATED IN UNDERGROUND CONDUIT. PROVIDE ONE (1) TRANSIENT SUPPRESSION MODULE FOR EACH FIRE ALARM CIRCUIT.
4. FIRE ALARM CABLING IN UNDERGROUND CONDUIT SHALL BE LISTED FOR WET LOCATIONS.
5. THE EXTERIOR JUNCTION BOXES SHALL BE TAMPER-RESISTANT SCREWS OR OTHER APPROVED MECHANICAL MEANS FOR PREVENTING ACCESS TO JUNCTION BOXES AND DEVICE COVERS INSTALLED OUTSIDE OF THE BUILDING IN ACCORDANCE WITH NFPA 72.

10/FA3 EXTERIOR BACKFLOW MONITORING DETAIL

NOT TO SCALE

Order Plans @ WWW.LDILine.com

CODE CONSULTANTS, INC.
2043 WOODLAND PKWY, SUITE 300
ST. LOUIS, MISSOURI 63146-4235
314-991-2633
www.codeconsultants.com

Firestone COMPLETE AUTO CARE

THIS DRAWING IS THE PROPERTY OF BRIDGESTONE RETAIL OPERATIONS, LLC AND IS LOANED ON THE EXPRESS CONDITION THAT IT IS NOT TO BE USED IN ANY WAY DELETERIOUS TO THE INTERESTS OF BRIDGESTONE RETAIL OPERATIONS, LLC. THE ACCEPTANCE OF THIS DRAWING WILL BE CONSTRUED AS AN ACCEPTANCE OF THE FOREGOING CONDITION AND AS ADMISSION TO THE EXCLUSIVE OWNERSHIP IN AND TO THE DRAWING BY BRIDGESTONE RETAIL OPERATIONS, LLC.

STIPULATION OF REUSE
THIS DRAWING WAS PREPARED FOR USE ON A SPECIFIC SITE AT SUMMERVILLE, SC CONTEMPORANEOUSLY WITH ITS ISSUE DATE ON 12/20/2019 AND IT IS NOT SUITABLE FOR USE ON A DIFFERENT PROJECT SITE OR AT A LATER TIME. USE OF THIS DRAWING FOR REFERENCE OR EXAMPLE ON ANOTHER PROJECT REQUIRES THE SERVICES OF PROPERLY LICENSED ARCHITECTS AND ENGINEERS. REPRODUCTION OF THIS DRAWING FOR REUSE ON ANOTHER PROJECT IS NOT AUTHORIZED AND MAY BE CONTRARY TO THE LAW.

NEW FCAC STORE
2020 ER
1762 STATE RD
SUMMERVILLE, SC

SOUTH CAROLINA LICENSED PROFESSIONAL ENGINEER No. 28889 JACOB P. HEMKE 2020-01-07

FIRE PROTECTION ENGINEER OF RECORD:
JACOB P. HEMKE, PE
LICENSE NO. 28889
CODE CONSULTANTS, INC.
2043 WOODLAND PKWY, SUITE 300
ST. LOUIS, MO 63146-4235
PHONE: 314-991-2633
CORPORATE CERTIFICATE OF AUTHORITY NO. 2751

ISSUE BLOCK

1	01/06/20	REV #1

PROPERTY NO.: 317910
6 DIGIT NO.: 799862
4 DIGIT NO.: 013K
AOR PROJECT NUMBER: 1955B67
TO PERMIT: DATE: 12-20-19
TO BID: DATE: ##-##-##

SHEET TITLE: FIRE ALARM DETAILS

SHEET NUMBER: FA3